Item no.: 372287

81430 - Easy 45 Module cover plate hole cut-out M6, 45 x 22.5 mm white

0,45 EUR

Item no.: 372287
shipping weight: 0.10 kg
Manufacturer: Delock

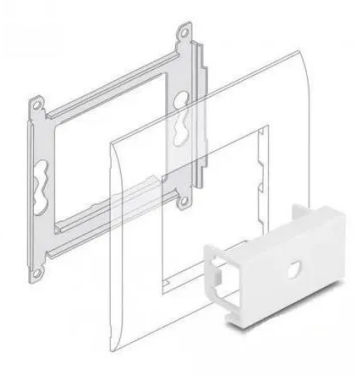

Product Description

This module cover by Delock provides a hole cut-out of 6.2 mm. Thanks to the simple snap-in mechanism, the cover sits firmly in place and can be easily replaced if necessary.This module cover was designed to accommodate various connectors with an M6 external thread. For example, optionally available audio cables with a jack socket can be fitted. The low material thickness of just 1.5 mm offers sufficient strength while requiring little space for installation.Easy 45 is a variable, modular system that allows components such as sockets, HDMI or USB connections to be combined according to individual requirements. The Easy 45 modules are standardised and can be installed in various module supports or trunking. Easy 45 forms the interface between electrical, network and system installations and numerous peripheral devices, such as TVs, monitors, printers, notebooks and many more.

Specification- Material: PC plastic- Suitable for Delock Easy 45 module carrier- Suitable for 45 mm trunking with at least 45 mm installation depth- Hole cut-out: Ø 6.2 mm- Module size: 22.5 x 45 mm- Dimensions (LxWxH): approx. 45.0 x 22.5 x 22.0 mm- Colour: whiteSystem requirements- One free module slot Delock Easy 45 (22.5 x 45 mm)Package contents- 1 x module cover

Specifications

Scan this QR code to view the product
All details, up-to-date prices and availability